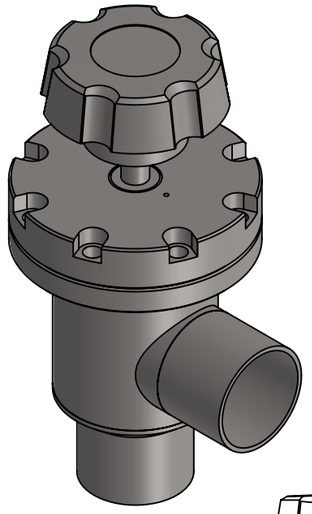

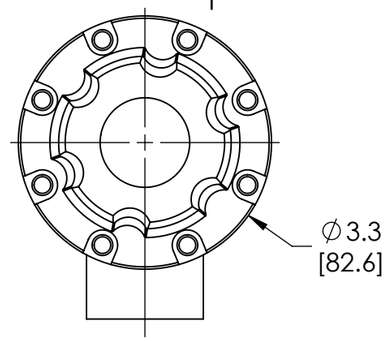

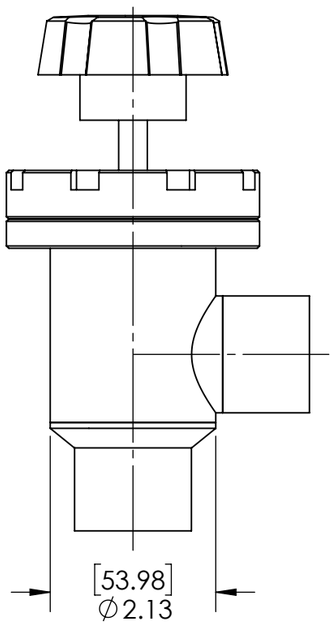

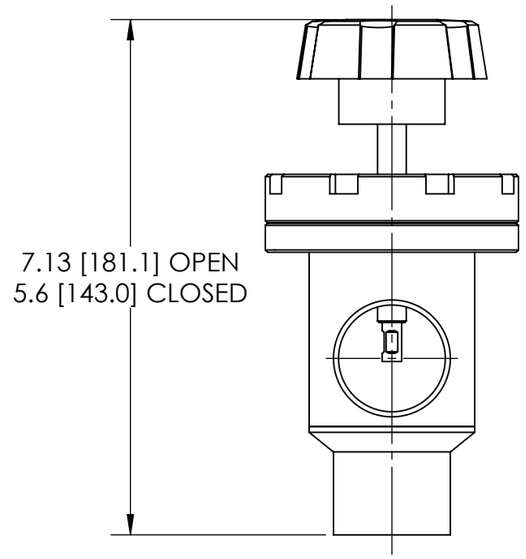

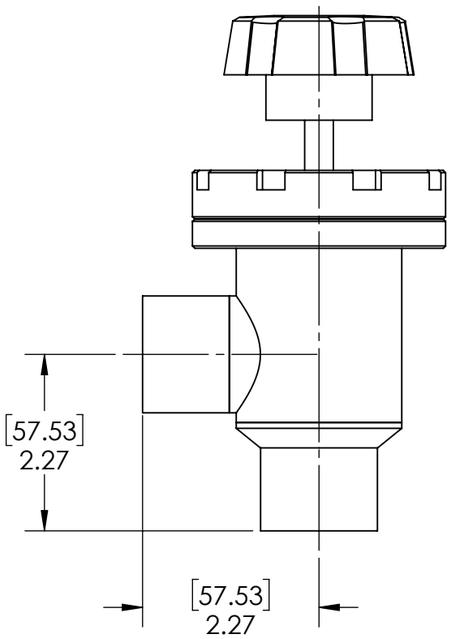

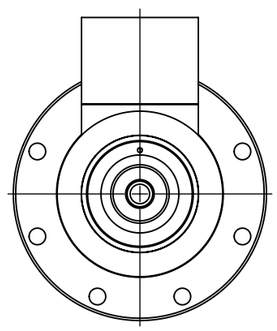

SPECIFICATIONS:
*PORT: ∅1.5" TUBE
*MATERIALS:
BODY: 304 SST, ELECTROPOLISHED
BELLOWS: WELDED AM-350 SST
BONNET SEAL: COPPER
POPPET SEAL: VITON
OTHER MATERIALS AVAILABLE
ACTUATION: SELF-LUBRICATING BRONZE NUTS
WITH ACME THREADS
DIFFERENTIAL PRESSURE: MAXIMUM 20 PSIA ACROSS VALVE SEAT
MAXIMUM TEMPERATURE VITON SEALS:
SUSTAINED: ≤150°C [302°F]
INTERMITTENT: ≤ 204°C [399°F]
VACUUM RANGE: METAL BONNET SEAL: ≥ $1x10^{10}$ TORR HIGH VACUUM
OPTIONS: FITTINGS AND O-RINGS

NOTES:
1. ALL WELDS TO BE VAC. TIGHT TO $2x10^{-10}$ MIN. SENSITIVITY.
2. DIMENSIONS IN [X.XX] ARE IN mm.

PROPRIETARY AND CONFIDENTIAL
THE INFORMATION CONTAINED IN THIS DRAWING IS THE SOLE PROPERTY OF THERMIONICS LABORATORY INC. ANY REPRODUCTION IN PART OR AS A WHOLE WITHOUT THE WRITTEN PERMISSION OF THERMIONICS LABORATORY INC. IS PROHIBITED.

DIMENSIONS ARE IN INCHES
TOLERANCES:
FRACTIONAL ± N/A
ANGULAR: MACH ± BEND ± .5°
ONE PLACE DECIMAL ±.1
TWO PLACE DECIMAL ±.01
THREE PLACE DECIMAL ±.005
SURFACE FINISH 63 R.M.S.

FINISH:

	NAME	SIGNATURE	DATE		USED ON	NEXT ASSY.
DESIGN/ENG.						GEN. USE
CHK'D						
APPV'D						
MFG						
Q.A				MATERIAL:		
				WEIGHT:		

DO NOT SCALE DRAWING | REVISION

thermionics laboratory inc.
Hayward Ca. 94545

TITLE:
ANGLE VALVE, RIGHT ANGLE, COPPER BONNET SEAL, MANUAL ACTUATION

DWG NO. MA-150-H | A3

SCALE:1:2 | SHEET 1 OF 1