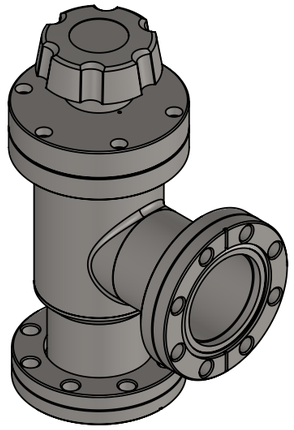

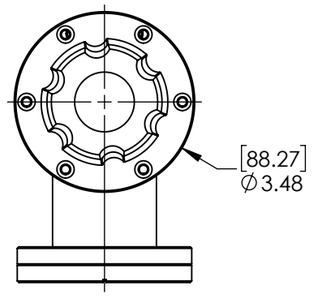


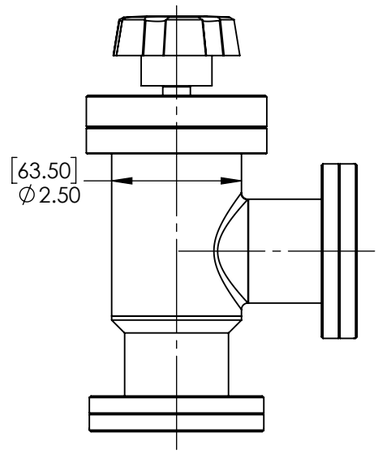


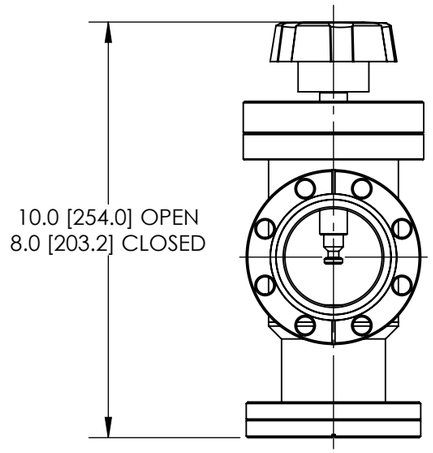


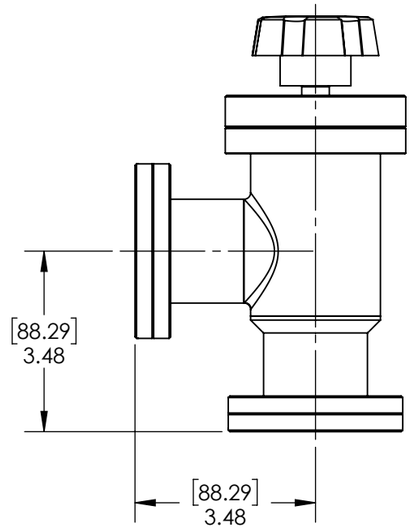


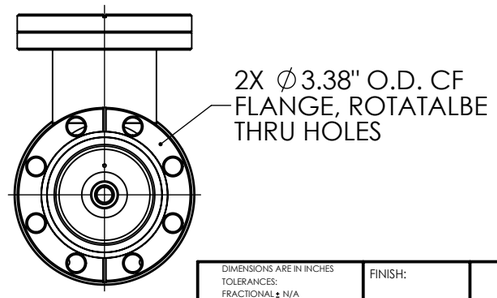


SPECIFICATIONS:
*PORT: ∅3.38" O.D. CF FLANGE
*MATERIALS:
BODY: 304 SST, ELECTROPOLISHED
BELLOWS: WELDED AM-350 SST
BONNET SEAL: VITON
POPPET SEAL: VITON
OTHER MATERIALS AVAILABLE
ACTUATION: SELF-LUBRICATING BRONZE NUTS
WITH ACME THREADS
DIFFERENTIAL PRESSURE: MAXIMUM 20 PSIA ACROSS VALVE SEAT
MAXIMUM TEMPERATURE VITON SEALS:
SUSTAINED: ≤150°C [302°F]
INTERMITTENT: ≤ 204°C [399°F]
VACUUM RANGE: VITON BONNET SEAL: ≥ $1x10^{9}$ TORR HIGH VACUUM
OPTIONS: FITTINGS AND O-RINGS

NOTES:
1. ALL WELDS TO BE VAC. TIGHT TO $2x10^{-10}$ MIN. SENSITIVITY.
2. DIMENSIONS IN [X.XX] ARE IN mm.

**PROPRIETARY AND CONFIDENTIAL**
THE INFORMATION CONTAINED IN THIS DRAWING IS THE SOLE PROPERTY OF THERMIONICS LABORATORY INC. ANY REPRODUCTION IN PART OR AS A WHOLE WITHOUT THE WRITTEN PERMISSION OF THERMIONICS LABORATORY INC. IS PROHIBITED.

DIMENSIONS ARE IN INCHES
TOLERANCES:
FRACTIONAL ± N/A
ANGULAR: MACH ± BEND ± .5°
ONE PLACE DECIMAL ±.1
TWO PLACE DECIMAL ±.01
THREE PLACE DECIMAL ±.005
SURFACE FINISH 63 R.M.S.

FINISH:

DO NOT SCALE DRAWING

REVISION

***thermionics laboratory inc.***
***Hayward Ca. 94545***

| | NAME | SIGNATURE | DATE | | USED ON | NEXT ASSY. |
|---|---|---|---|---|---|---|
| DESIGN/ENG. | | | | | | GEN. USE |
| CHK'D | | | | | | |
| APPV'D | | | | | | |
| MFG | | | | | | |
| Q.A | | | | | | |

MATERIAL:

WEIGHT:

TITLE:
***ANGLE VALVE, RIGHT ANGLE, MANUAL ACTUATION***

DWG NO.
A-200-H-CF

A3

SCALE:1:3

SHEET 1 OF 1