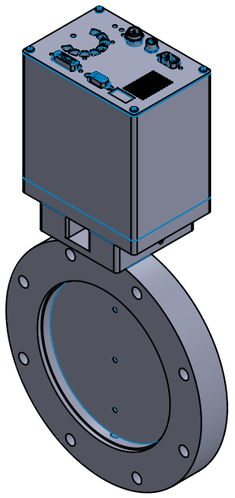

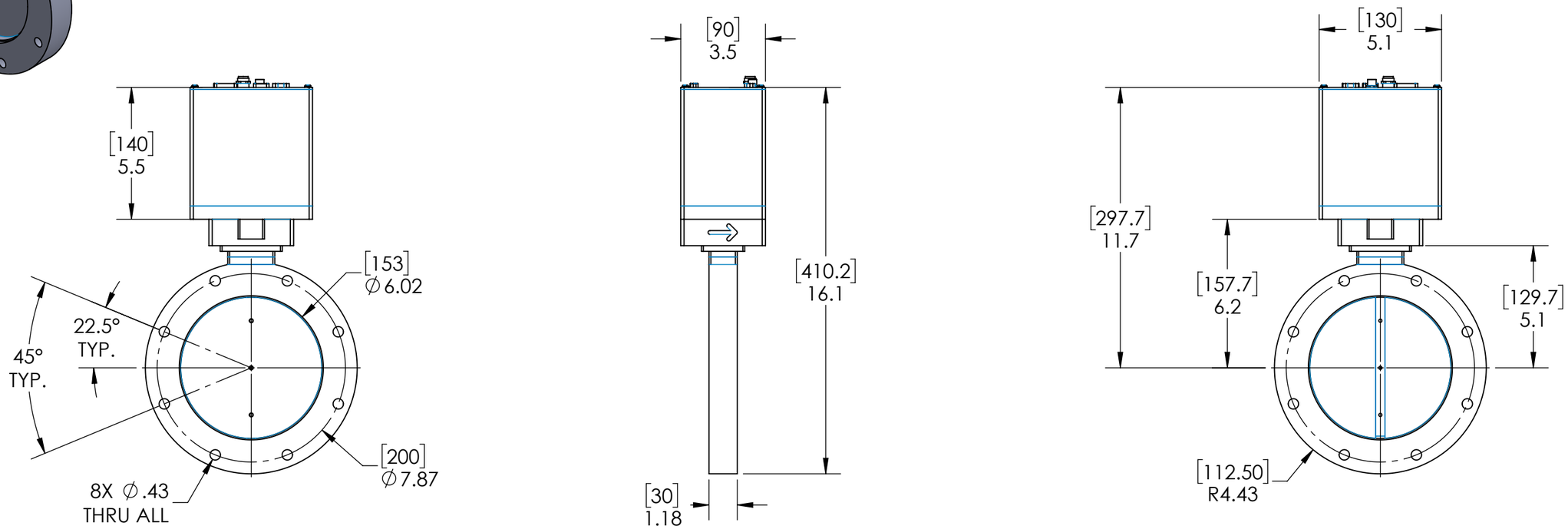

SPECIFICATIONS:
*MOTORIZED
*SST CONSTRUCTION
*RS232 COMMUNICATION
*TWO (2) SENSORS, OPEN AND CLOSED
*VACUUM RANGE: 1 x 10-8 MBAR TO 1.2 BAR
*CLOSING/OPENING TIME: 0.3S
*LEAK TEST: 1 x 10-9 MBAR L/S
*LIFE: 2 MILLION (UNHEATED AND UNDER CLEAN CONDITIONS)
*SEAL: VITON O-RING STANDARD (KALREZ AVAILABLE)
*VITON O-RING STANDARD, SHAFT
*LOW PARTICLE GENERATION
*ANY MOUNTING POSITION
*OPERATING TEMPERATURE: +10˚C TO +150˚C
*CLEANED TO UHV STANDARDS BY THERMIONICS METAL PROCESSING INC. (TMPI)

NOTE:
1. DIMENSIONS IN [X.XX] ARE IN mm.

PROPRIETARY AND CONFIDENTIAL
THE INFORMATION CONTAINED IN THIS DRAWING IS THE SOLE PROPERTY OF TLI ENTERPRISES, INC. ANY REPRODUCTION IN PART OR AS A WHOLE WITHOUT THE WRITTEN PERMISSION OF THERMIONICS LABORATORY INC. IS PROHIBITED.

DIMENSIONS ARE IN INCHES
TOLERANCES:
FRACTIONAL ± N/A
ANGULAR: MACH ± BEND ±.5°
ONE PLACE DECIMAL ±.1
TWO PLACE DECIMAL ±.01
THREE PLACE DECIMAL ±.005
SURFACE FINISH 63 R.M.S.

FINISH:

thermionics laboratory, inc.

DO NOT SCALE DRAWING | REVISION

thermionics laboratory inc.
3118 Depot Rd., Hayward Ca. 94545

	NAME	SIGNATURE	DATE		USED ON	NEXT ASSY.
DESIGN/ENG.						GEN. USE
CHK'D						
APPV'D						
MFG						
Q.A						

MATERIAL:

WEIGHT:

TITLE:
BUTTERFLY VALVE, ISO160F FLANGE, MOTORIZED, OUTLINE DRAWING

DWG NO. BFV-ISO160F-SST-RS232 | A3

SCALE:1:5 | SHEET 1 OF 1